INSTRUCTIONS

T330-IMS

IMAGE SELECTOR

JEOL

No. ISMT330IMS-1E

JEOL LTD./JEOL TECHNICS LTD.
Tokyo Japan

8708002KP

1 GENERAL

The IMS, used in conjunction with the JSM-T series Scanning Microscope, enables various types of specimen image to be selected to display on the CRT by pressing a pushbutton.

2 SPECIFICATIONS

- Selection switches: 7 pushbuttons with indicator, 1 unit
- Kind of signals:
  - SEI: secondary electron image
  - BEI TOPO: backscattered electron TOPOGRAPHIC image
  - BEI COMPO: backscatterd electron COMPOSITE image
  - X-RAY: X-ray image
  - CLD: (infrared) cathodoluminescence image
  - TED: transmitted electron image
  - EMF: electromotive force image
- Observation mode: SPEED EXP ／SLOW1 ／SLOW2
- Supply power: ±12V, 100mA for detectors

3 COMPOSITIONS

Switch unit	1
Signal relay	1
Power unit	1

4 PANEL DESCRIPTION

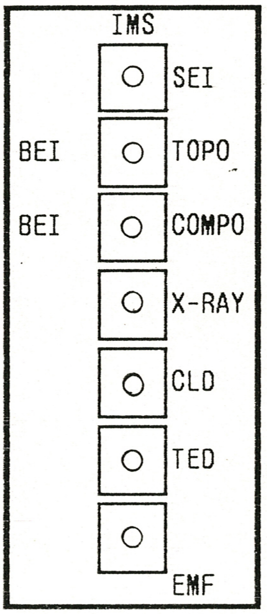

- SEI: secondary electron image
- BEI TOPO: backscattered electron TOPOGRAPHIC image
- BEI COMPO: backscatterd electron COMPOSITE image
- X-RAY: X-ray image
- CLD: (infrared) cathodoluminescence image
- TED: transmitted electron image
- EMF: electromotive force image

5 OPERATION

1) Press SPEED EXP / SLOW1 or SLOW2 switch.

Note: When TV mode is used, secondary electron image is displayed on the CRT.

2) Select a desired signal.(LED is ON.)

SEI: Adjust image contrast by CONTRAST knob on the control panel.
BEI TOPO: Adjust image contrast by CONTRAST knob on the BEI unit.
BEI COMPO:Adjust image contrast by CONTRAST knob on the BEI unit.
X-RAY: Set the MAIN on the BCX to ON.
CLD: Adjust image contrast by CONTRAST knob on the PSD unit.
TED: Adjust image contrast by CONTRAST knob on the PSD unit.
EMF: Adjust image contrast by GAIN knob on the EMF unit.

Note: Refer operation etc. for each attachment to the each instruction manuals.

6 SIMULTANEOUS USE OF OTHER ATTACHMENTS

- IMS can be installed simultaneously other than MID.
- Following attachment is required toobservation.

BEI TOPO・COMPO: T330-BEIS2(T330),T220-BEIS2(T220)
X-RAY: FCS(T330)/EDS and BCX
CLD: CLD/CLDIR (CLDIR for infrared cathodoluminescence)
TED: LG3TED
EMF: LGSHIC and EMF

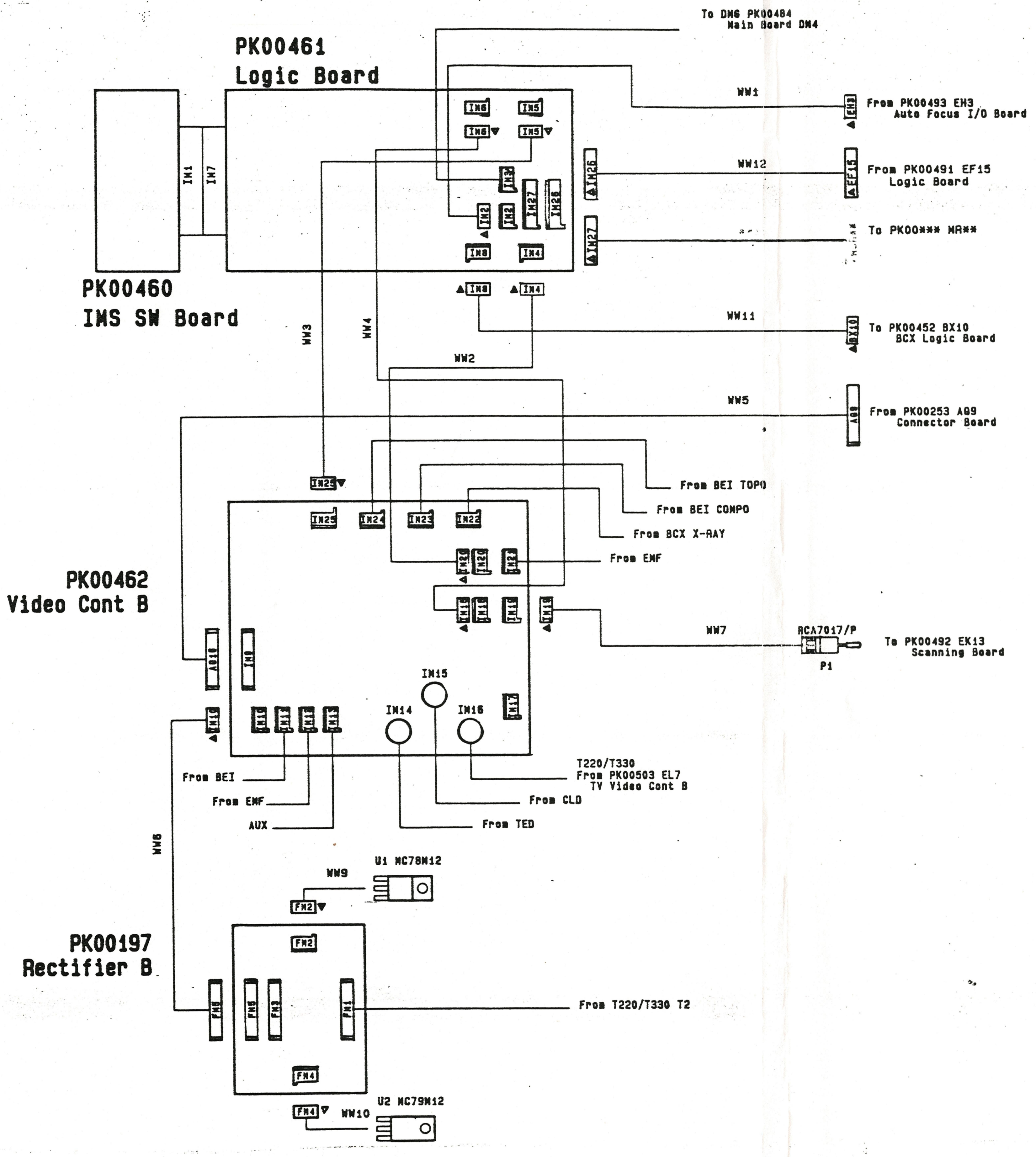
To DWG PK00484
Main Board DM4
PK00461
Logic Board
IN6
IN5
IN6
IN5
IN1
IN7
IN3
IN2
IN2
IN27
IN26
IN8
IN4
IN26
IN27
IN8
IN4
PK00460
IMS SW Board
WW1
From PK00493 EH3
Auto Focus I/O Board
EH3
WW12
EF15
From PK00491 EF15
Logic Board
To PK00*** MA**
WW11
BX10
To PK00452 BX10
BCX Logic Board
WW3
WW4
WW2
WW5
A09
From PK00253 A09
Connector Board
IN25
IN25
IN24
IN23
IN22
From BEI TOPO
From BEI COMPO
From BCX X-RAY
From EMF
PK00462
Video Cont B
WW7
RCA7017/P
P1
To PK00492 EK13
Scanning Board
A010
IN9
IN15
IN14
IN16
IN17
From BEI
From EMF
AUX
T220/T330
From PK00503 EL7
TV Video Cont B
From CLD
From TED
WW6
U1 MC78M12
WW9
FM2
PK00197
Rectifier B
FM2
FM1
FM4
From T220/T330 T2
U2 MC79M12
FM4
WW10

NOTES 1.TS678000- 2.TS678004- 86/11/12 3 4 5	DWG.NAME S.SUZAKI	TITLE IMS		
	DWG.DATE 86/06/03	MARK IM	DWG.NO PK00459	PAGE 1/1

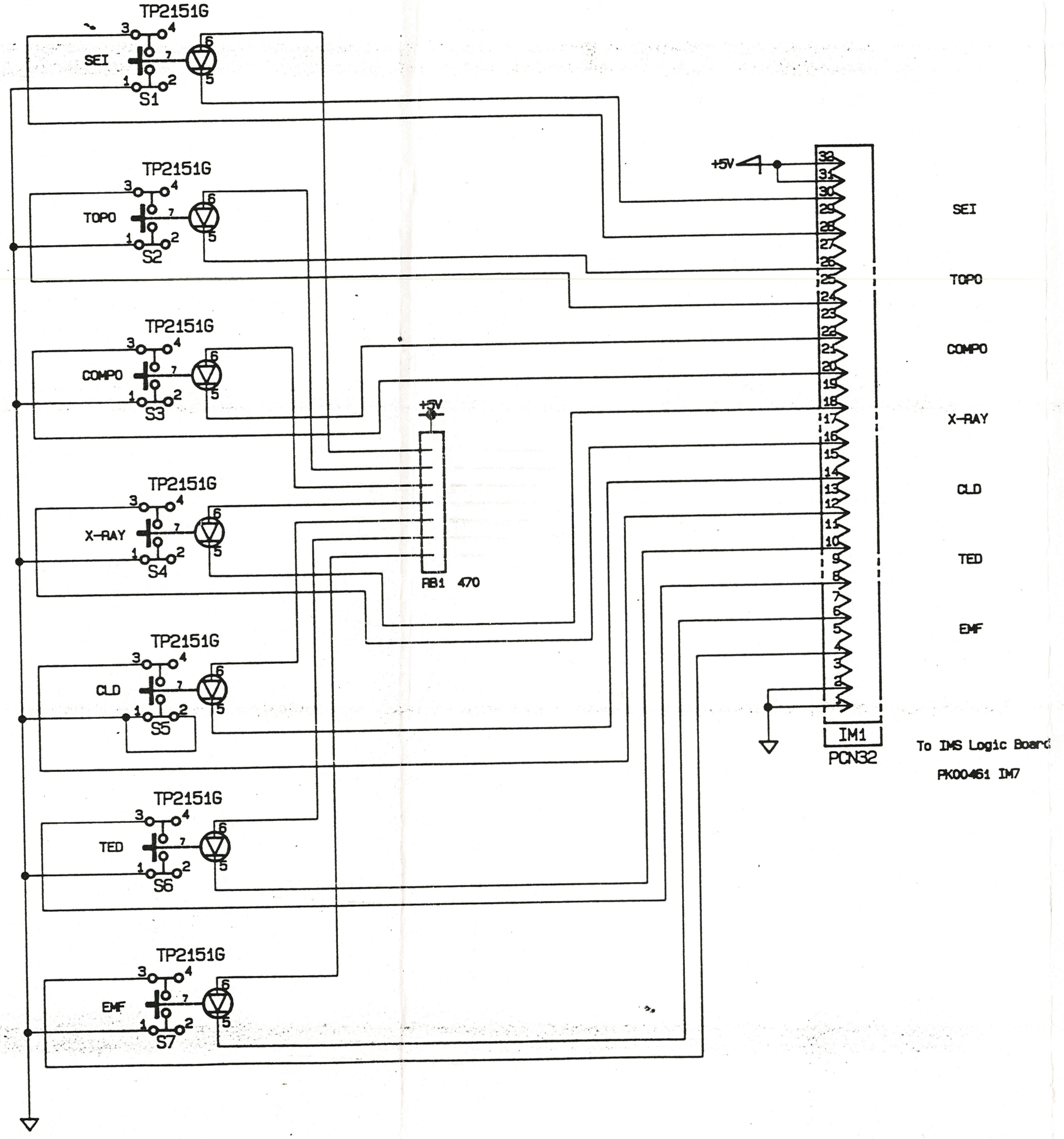
TP2151G
SEI
S1
TP2151G
TOPO
S2
TP2151G
COMPO
S3
TP2151G
X-RAY
S4
TP2151G
CLD
S5
TP2151G
TED
S6
TP2151G
EMF
S7
1
2
3
4
5
6
7
+5V
RB1 470
+5V
32
31
30
29
28
27
26
25
24
23
22
21
20
19
18
17
16
15
14
13
12
11
10
9
8
7
6
5
4
3
2
1
IM1
PCN32
SEI
TOPO
COMPO
X-RAY
CLD
TED
EMF
To IMS Logic Board
PK00461 IM7

DRAWING
S.SUZAKI

TITLE
SW Board

DATE
86/06/06

MARK
IMS

DWG.NO.
PK00460

1/1

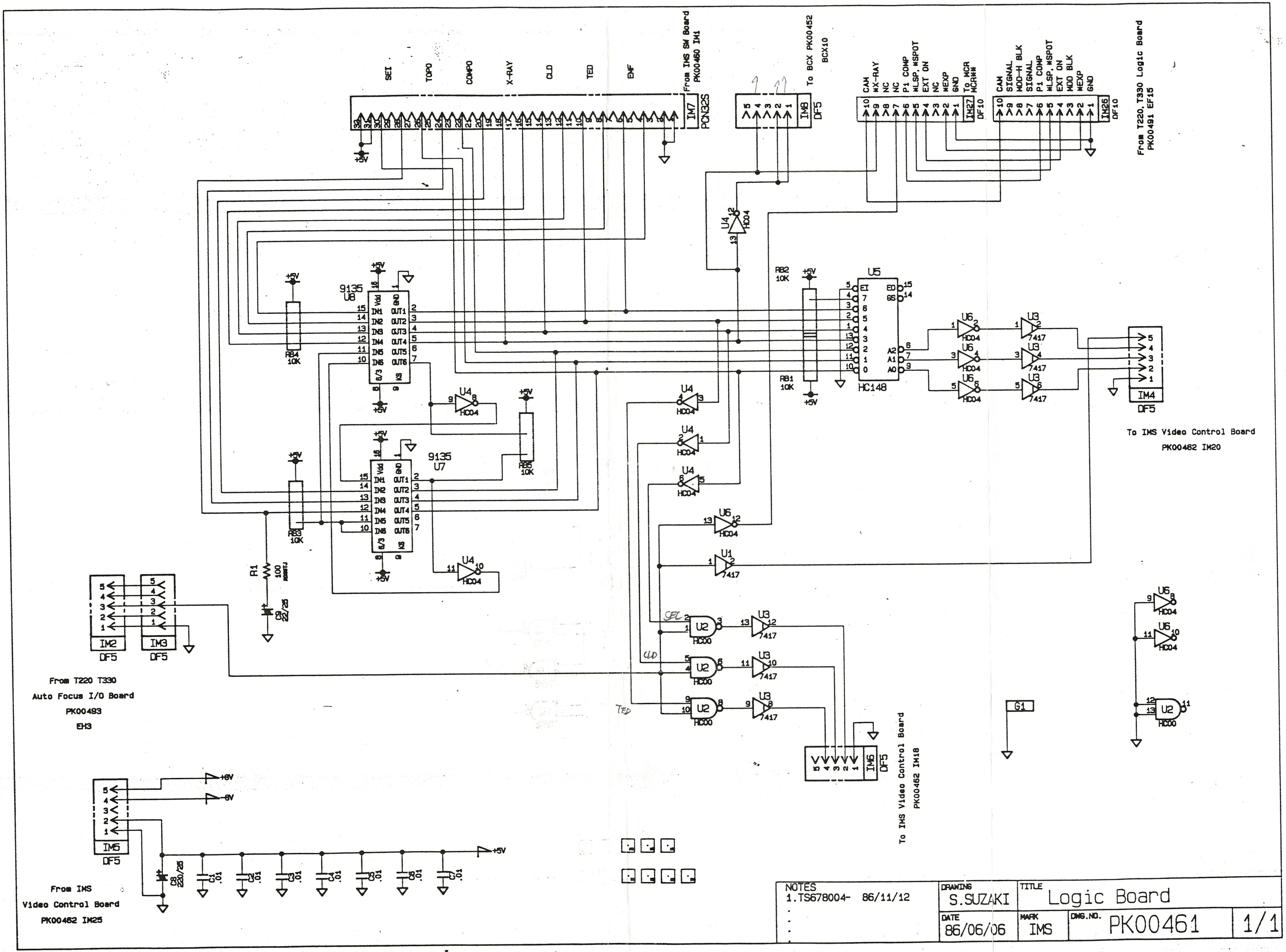

SEI
TOPO
COMPO
X-RAY
CLD
TED
EMF
From IMS SW Board PK00460 IM1
IM7
PCN32S
To BCX PK00452 BCX10
IM8
DF5
CAM
*X-RAY
NC
NC
P1 COMP
*LSP, *SPOT
EXT ON
NC
*EXP
GND
To MCR MCR**
IM27
DF10
CAM
SIGNAL
MDD-H BLK
SIGNAL
P1 COMP
*LSP, *SPOT
EXT ON
MDD BLK
*EXP
GND
IM26
DF10
From T220, T330 Logic Board PK00491 EF15
U4 HC04
+5V
9135 U8
Vdd
GND
IN1
IN2
IN3
IN4
IN5
IN6
OUT1
OUT2
OUT3
OUT4
OUT5
OUT6
RB4 10K
RB2 10K
RB1 10K
RB3 10K
RB5 10K
U5
HC148
EI
EO
GS
A2
A1
A0
U6 HC04
U3 7417
IM4
DF5
To IMS Video Control Board PK00462 IM20
9135 U7
U1 7417
R1 100
C9 22/25
U2 HC00
SEL
CLD
TED
IM2
IM3
DF5
From T220 T330 Auto Focus I/O Board PK00493 EH3
IM6
DF5
To IMS Video Control Board PK00462 IM18
G1
+8V
-8V
IM5
DF5
C8 220/25
C1 .01
C2 .01
C3 .01
C4 .01
C5 .01
C6 .01
C7 .01
From IMS Video Control Board PK00462 IM25

NOTES
1.TS678004- 86/11/12

DRAWING S.SUZAKI	TITLE Logic Board	
DATE 86/06/06	MARK IMS	DWG.NO. PK00461 1/1

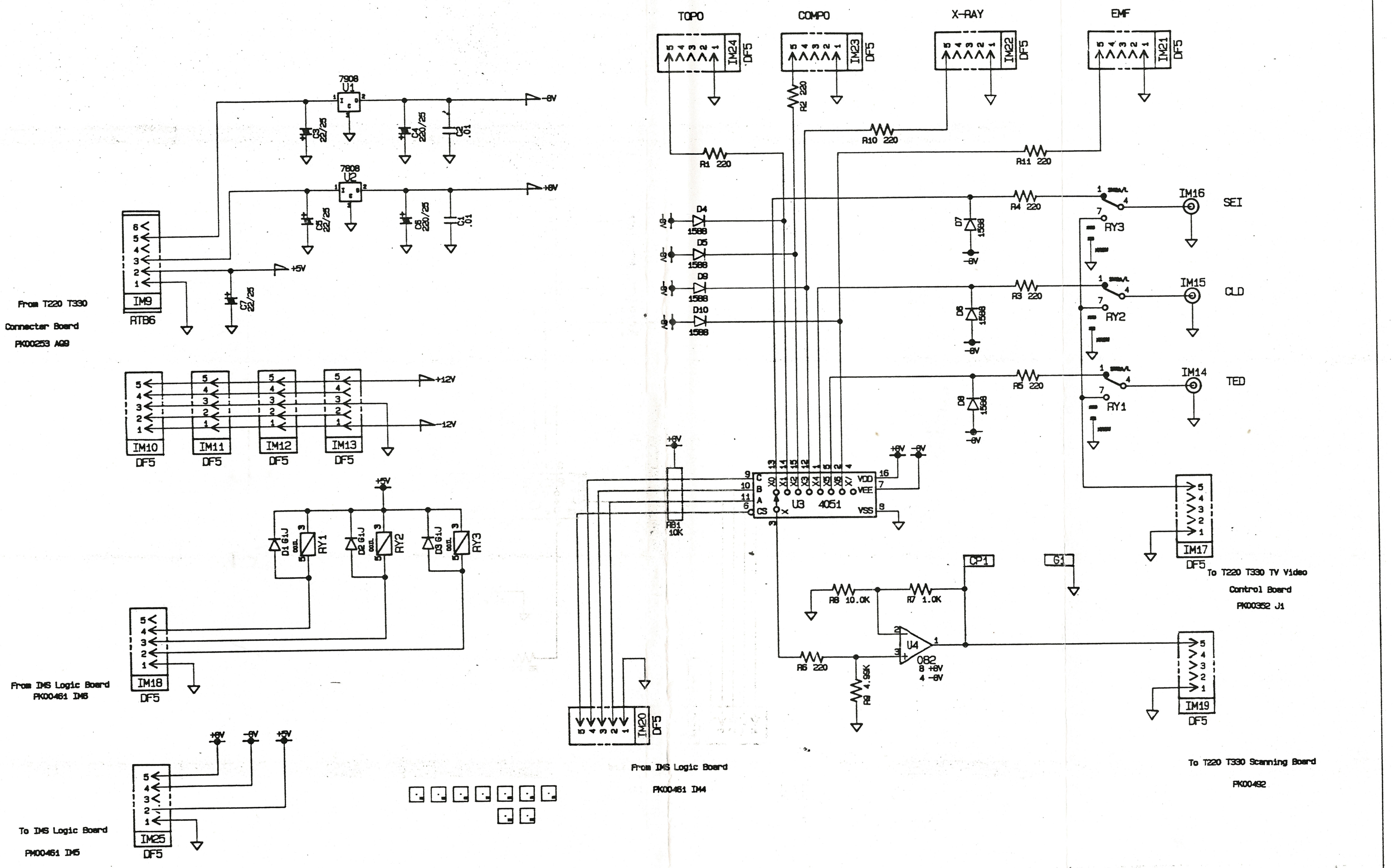
TOPO
COMPO
X-RAY
EMF
IM24 DF5
IM23 DF5
IM22 DF5
IM21 DF5
R2 220
R10 220
R1 220
R11 220
7908 U1
7808 U2
-8V
+8V
C3 22/25
C4 220/25
C2 .01
C6 22/25
C5 220/25
C1 .01
+5V
C7 22/25
IM9 RTB6
From T220 T330
Connecter Board
PK00253 A99
D4 1588
D5 1588
D9 1588
D10 1588
R4 220
R3 220
R5 220
D7 1588
D6 1588
D8 1588
RY3
RY2
RY1
IM16 SEI
IM15 CLD
IM14 TED
+12V
-12V
IM10 DF5
IM11 DF5
IM12 DF5
IM13 DF5
D1 G1J RY1
D2 G1J RY2
D3 G1J RY3
IM18 DF5
From IMS Logic Board
PK00461 IM6
IM25 DF5
To IMS Logic Board
PM00461 IM5
RB1 10K
U3 4051
VDD VEE VSS
X0 X1 X2 X3 X4 X5 X6 X7
C B A CS X
IM20 DF5
From IMS Logic Board
PK00461 IM4
CP1
G1
R8 10.0K
R7 1.0K
U4 082
8 +8V
4 -8V
R6 220
R9 4.99K
IM17 DF5
To T220 T330 TV Video
Control Board
PK00352 J1
IM19 DF5
To T220 T330 Scanning Board
PK00492

NOTES
1.TS678004- 86/11/12

DRAWING
S.SUZAKI

DATE
86/06/06

TITLE
Video Control Board

MARK
IMS

DWG.NO.
PK00462

1/1